ALU-MEDIA STAND

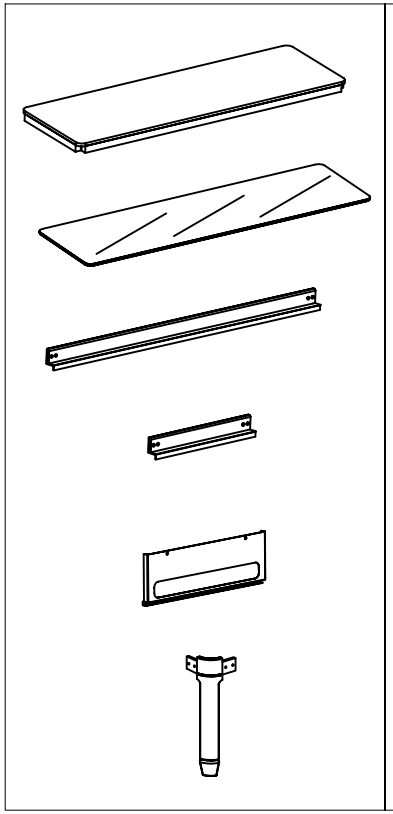

ITEM "A"
N. 1 PC

ITEM "B"
N. 1 PC

ITEM "C"
N. 2 PCS

ITEM "D"
N. 2 PCS

ITEM "E"
N. 1 PC

ITEM "F"
N. 4 PCS

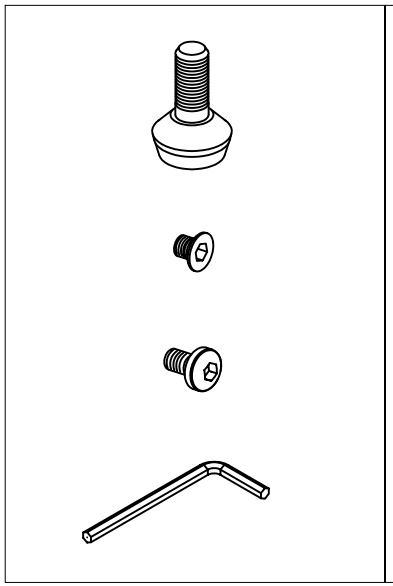

ITEM "G"
N. 4 PCS
LEVELLING FEET

ITEM "H"
N. 16 PCS
M6X10 FLAT
HEAD SCREW

ITEM "I"
N. 2 PCS
M6X12
HEAD SCREW

HEXAGONAL
KEY
N.1 PC

fig.1

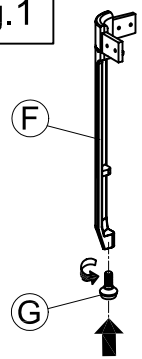

1 - SCREW IN THE FOUR ADJUSTABLE FEET "G" UNDER THE FOUR LEGS "F".

fig.2

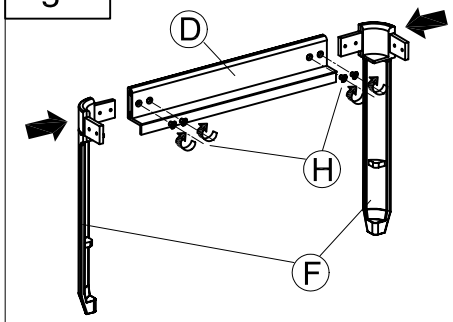

2 - INSERT THE TWO LEGS "F" INTO THE SIDE BARS "D" AND TIGHTEN THE FOUR SCREWS "H".
3 - REPEAT THE SAME PROCEDURE ON THE OTHER SHORT SIDE BAR.

fig.3

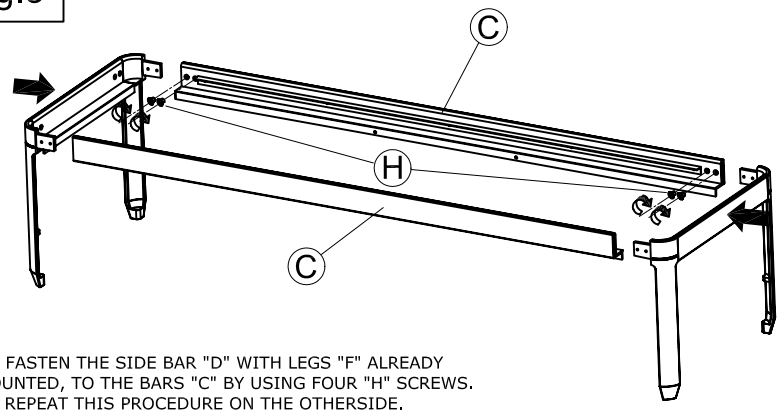

4 - FASTEN THE SIDE BAR "D" WITH LEGS "F" ALREADY MOUNTED, TO THE BARS "C" BY USING FOUR "H" SCREWS.
5 - REPEAT THIS PROCEDURE ON THE OTHERSIDE.

fig.4

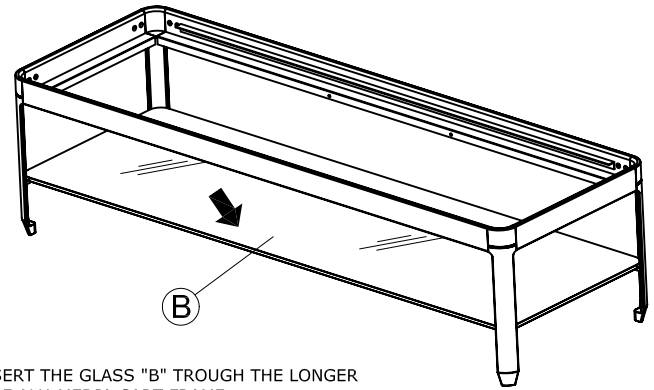

6 - INSERT THE GLASS "B" TROUGH THE LONGER SIDE OF ALU-MEDIA CART FRAME.

fig.5

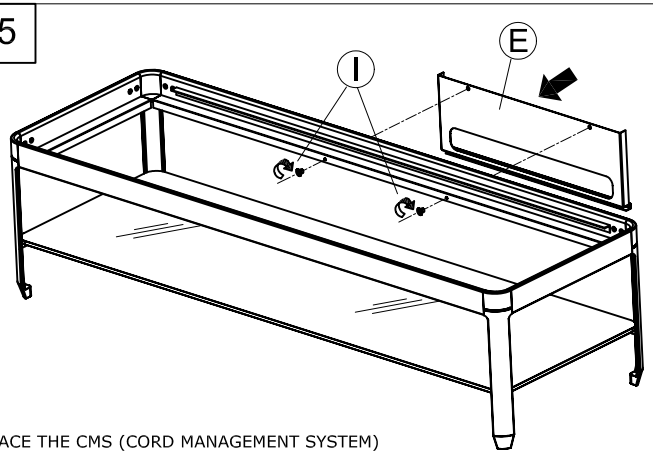

7 - PLACE THE CMS (CORD MANAGEMENT SYSTEM) "E" FROM THE OUTSIDE AND FIX IT WITH THE TWO SCREW "I" FROM THE INNER SIDE.

fig.6

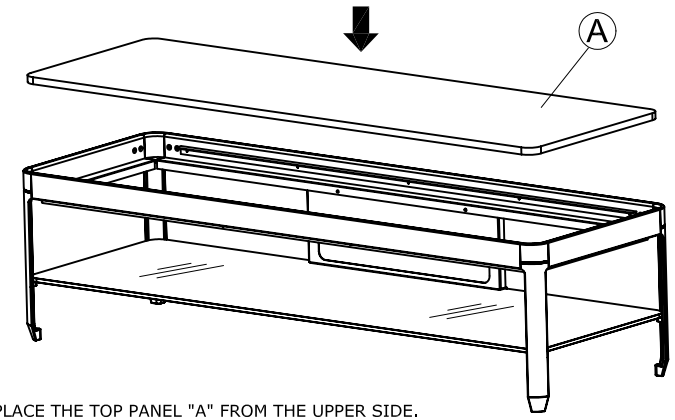

8 - PLACE THE TOP PANEL "A" FROM THE UPPER SIDE.

fig.7

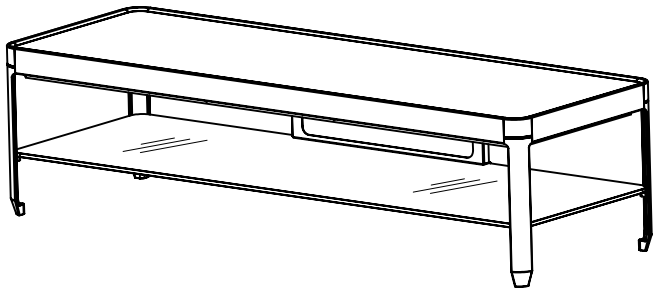

9 - FINAL RESULT.

REV01/11.07.05/SDN